AOS Seat Frame

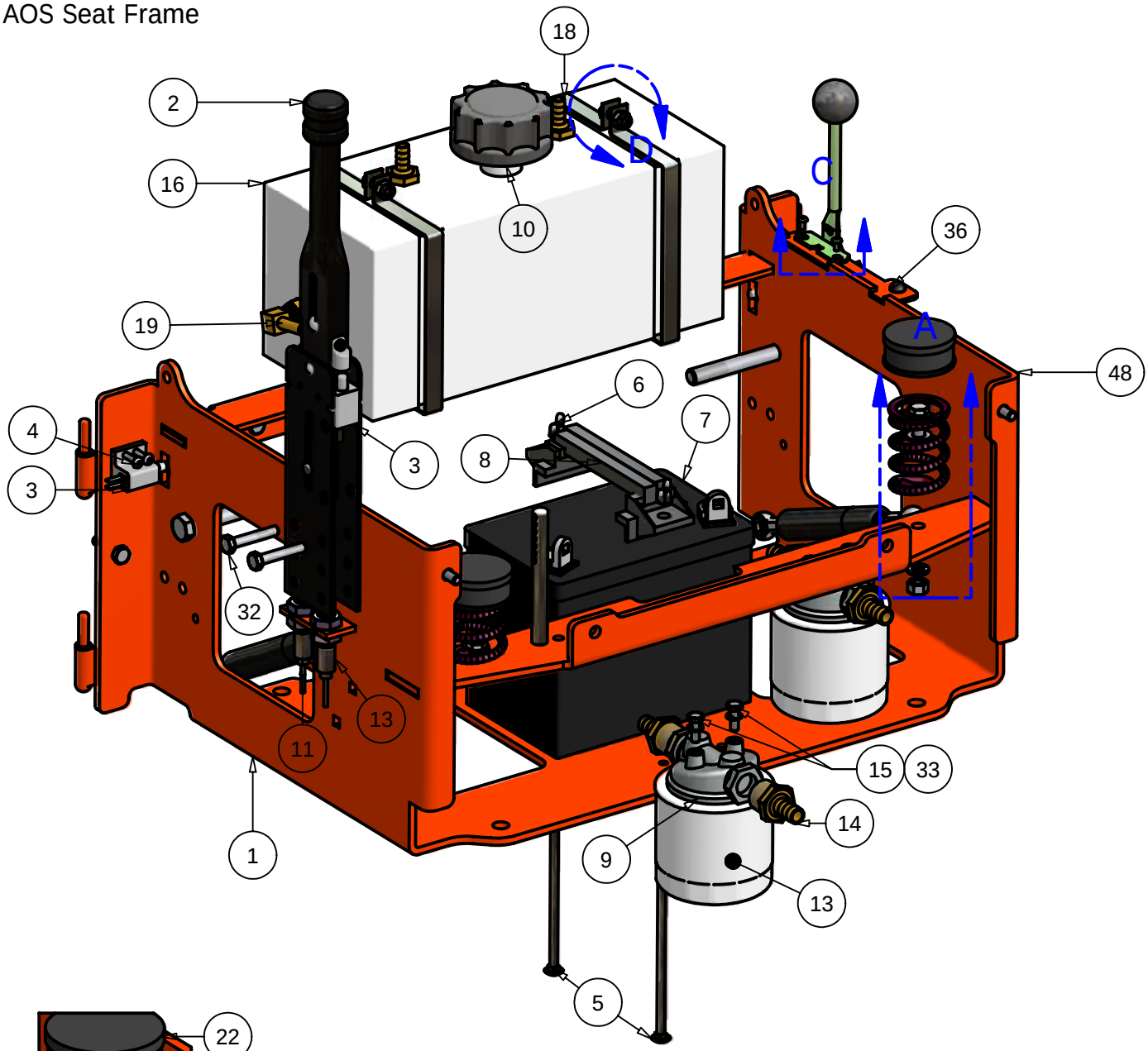

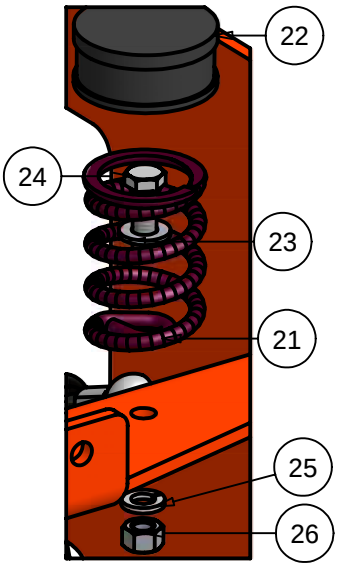

DETAIL A

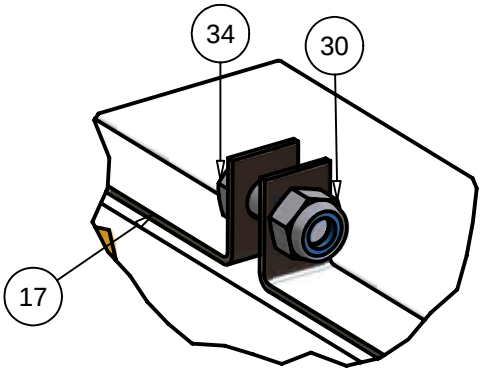

DETAIL D

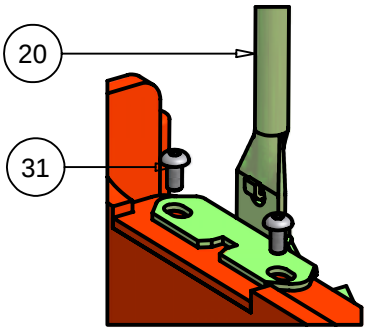

DETAIL C

Seat Frame			
ITEM	QTY	PART NUMBER	DESCRIPTION
1	1	080-6010-00	Seat Frame
2	1	069-8054-00	Brake Lever
3	3	077-8073-00	Brake Handle Switch
4	4	018-8056-00	1024 x 1" Bolt
5	2	018-8051-00	9" Stove Bolt for Diesel (Aos gets 8")
6	2	013-8051-00	1/4" Wing Nut
7	1	068-8049-00	Battery
8	1	043-8929-00	Battery hold-down
9	2	062-8013-00	Filter Head
10	1	066-8048-00	Hydraulic Tank Cap
11	1	064-8055-00	Short Brake Cable
12	1	064-8056-00	Long Brake Cable
13	2	063-8014-00	Hydraulic Filter
14	4	024-5050-00	1/2" x 1/2" Filter Head Fitting
15	4	018-8052-00	1/4" x 3/4" Hex Bolt
16	1	067-9016-00	Hydraulic Tank
17	2	213-6001-00	Hydraulic Tank Strap
18	2	024-5205-00	3/8" X 3/8" Hose Barb
19	2	024-5203-00	1/2" x 1/2" Filter Head Fitting (90 Degree)
20	1	055-8017-00	Throttle
21	2	034-8045-00	Seat Spring
22	2	014-8047-00	1 1/2" Spring Cap Cover
23	2	019-5029-00	3/8" Flat Washer
24	2	018-6012-00	3/8" x 1 1/2" Hex Bolt
25	4	019-5037-00	3/8" Lock Washer
26	8	013-6014-00	3/8" Hex Nut
27	12	019-8051-00	5/16" Lock Washer
28	8	019-8044-00	5/16" Flat Washer
29	1	054-8016-00	Choke
30	1	013-8047-00	5/16" Nylock Nut
31	2	018-5200-00	1024 X 5/8" Buttonhead Bolt
32	2	018-8059-00	5/16" x 1 3/4" Hex Bolt
33	4	019-4008-00	1/4" Lock Washer
34	4	018-8063-00	5/16" x 3/4" Hex Bolt
35	1	029-8059-00	Piezo Buzzer- 27 Kawasaki Only
36	1	071-3000-00	Seat
37	1	026-2006-00	Seat Plate